# ST-B plugs for membranes

suitable for multi-membrane cable entry plates & cable grommets

Plugs ST-B are used to seal already pierced membranes in various cable entry plates (KEL-DPU / KEL-DPZ / KEL-DP / KEL-QTA-DP) and KT-DT / QT-DT grommets as well as in the slit multi-range cable grommets KTMBS and QTMB.

Perfect for applications where cables have been removed. The IP rating of the cable entry plate remains.

## Specifications

| | |
|---|---|
| **Material** | Polyamide |
| **Flame class** | UL94-V0, self-extinguishing |
| **Operating temperature** | -40 C° to 120 C° |
| **Properties** | silicone free, halogen free |

## Advantages & benefits

- Sealing of pierced membranes which are no longer in use

## Product types & sizes

**ST-B 5**

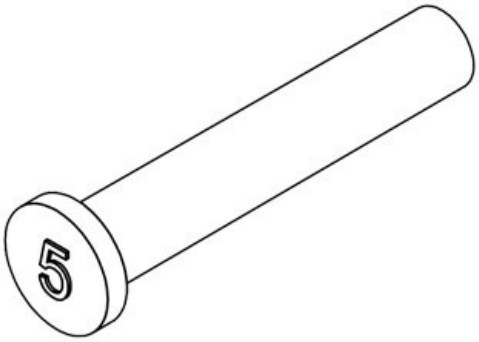


| | |
|---|---|
| Part No. | **42805** |
| EAN | **4251269332098** |
| Package quantity | **25** |
| Length | **30 mm** |
| Diameter D1 | **8 mm** |
| Diameter D2 | **5 mm** |

**ST-B 6**

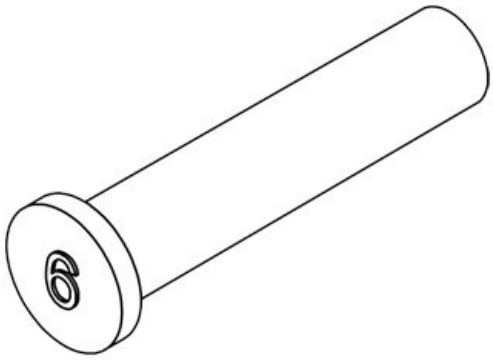


| | |
|---|---|
| Part No. | **42806** |
| EAN | **4251269309 144** |
| Package quantity | **25** |
| Length | **30 mm** |
| Diameter D1 | **9 mm** |
| Diameter D2 | **6 mm** |

**ST-B 7**

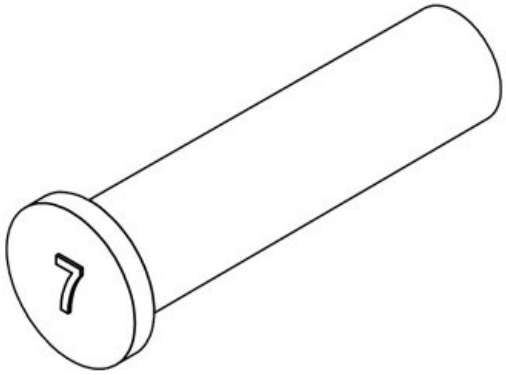


| | |
|---|---|
| Part No. | **42807** |
| EAN | **4251269332 104** |
| Package quantity | **25** |
| Length | **30 mm** |
| Diameter D1 | **10 mm** |
| Diameter D2 | **7 mm** |

**ST-B 8**

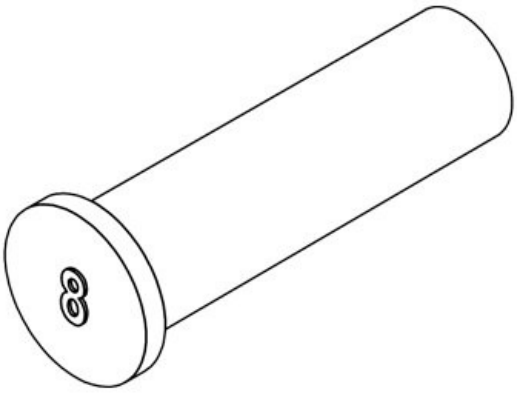


| | |
|---|---|
| Part No. | **42808** |
| EAN | **4251269332 111** |
| Package quantity | **25** |
| Length | **30 mm** |
| Diameter D1 | **11 mm** |
| Diameter D2 | **8 mm** |

**ST-B 9**

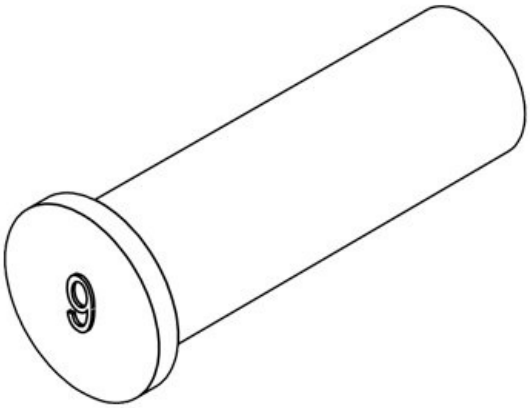


| | |
|---|---|
| Part No. | **42809** |
| EAN | **4251269332128** |
| Package quantity | **25** |
| Length | **30 mm** |
| Diameter D1 | **12 mm** |
| Diameter D2 | **9 mm** |

**ST-B 10**

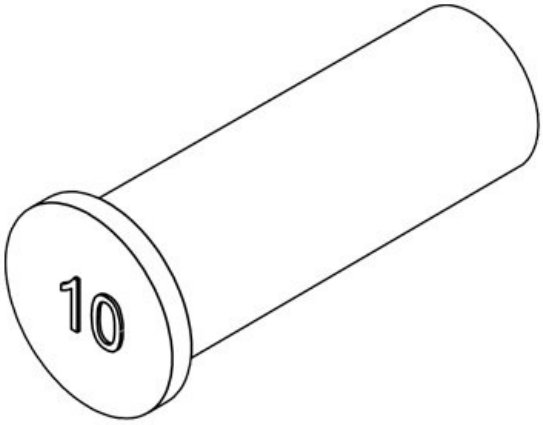


| | |
|---|---|
| Part No. | **42810** |
| EAN | **4251269309151** |
| Package quantity | **25** |
| Length | **30 mm** |
| Diameter D1 | **13 mm** |
| Diameter D2 | **10 mm** |

**ST-B 11**

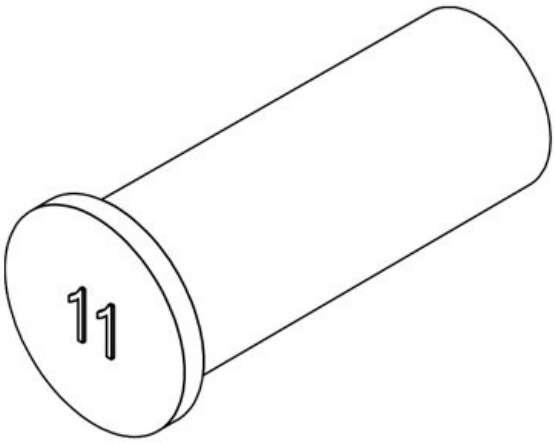


| | |
|---|---|
| Part No. | **42811** |
| EAN | **4251269332135** |
| Package quantity | **25** |
| Length | **30 mm** |
| Diameter D1 | **14 mm** |
| Diameter D2 | **11 mm** |

**ST-B 12**

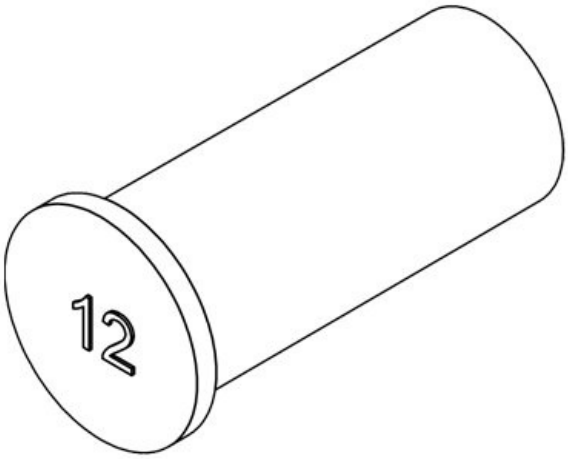


| | |
|---|---|
| Part No. | **42812** |
| EAN | **4251269309168** |
| Package quantity | **25** |
| Length | **30 mm** |
| Diameter D1 | **15 mm** |
| Diameter D2 | **12 mm** |

**ST-B 13**

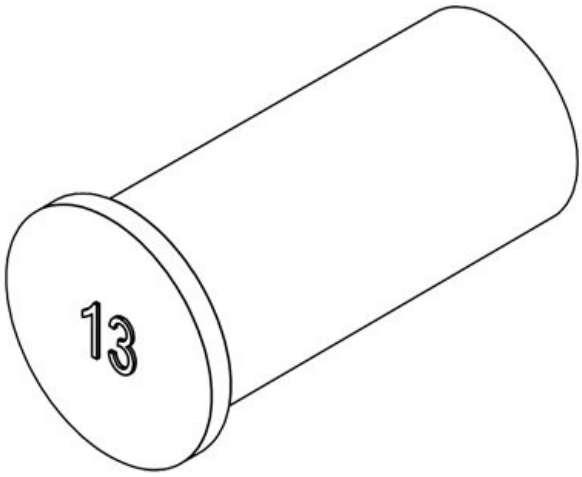


| | |
|---|---|
| Part No. | **42813** |
| EAN | **4251269332142** |
| Package quantity | **25** |
| Length | **30 mm** |
| Diameter D1 | **16 mm** |
| Diameter D2 | **13 mm** |

**ST-B 14**

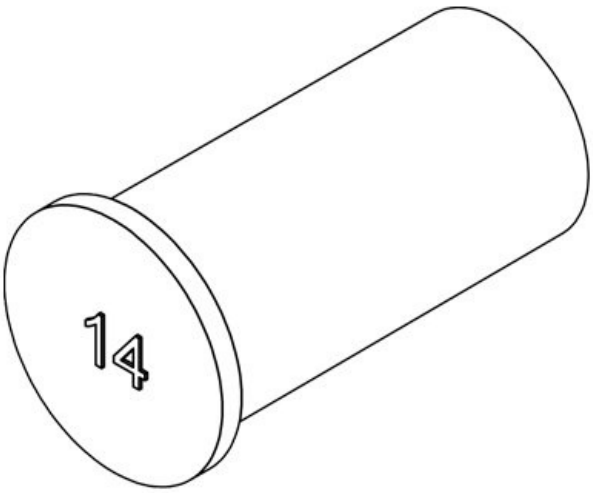


| | |
|---|---|
| Part No. | **42814** |
| EAN | **4251269332159** |
| Package quantity | **25** |
| Length | **30 mm** |
| Diameter D1 | **17 mm** |
| Diameter D2 | **14 mm** |

**ST-B 15**

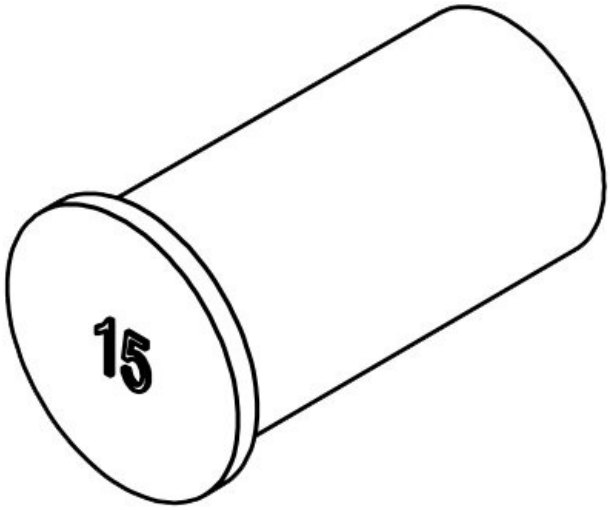


| | |
|---|---|
| Part No. | **42815** |
| EAN | **4251269332166** |
| Package quantity | **25** |
| Length | **30 mm** |
| Diameter D1 | **18 mm** |
| Diameter D2 | **15 mm** |

**ST-B 16**

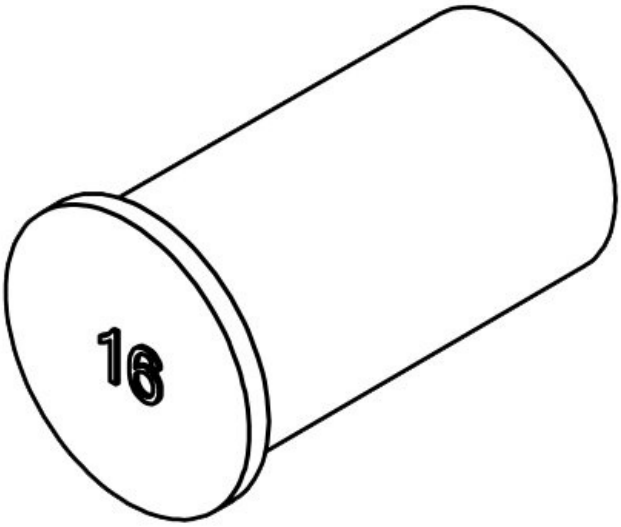


| | |
|---|---|
| Part No. | **42816** |
| EAN | **4251269309175** |
| Package quantity | **25** |
| Length | **30 mm** |
| Diameter D1 | **19 mm** |
| Diameter D2 | **16 mm** |

**ST-B 17**

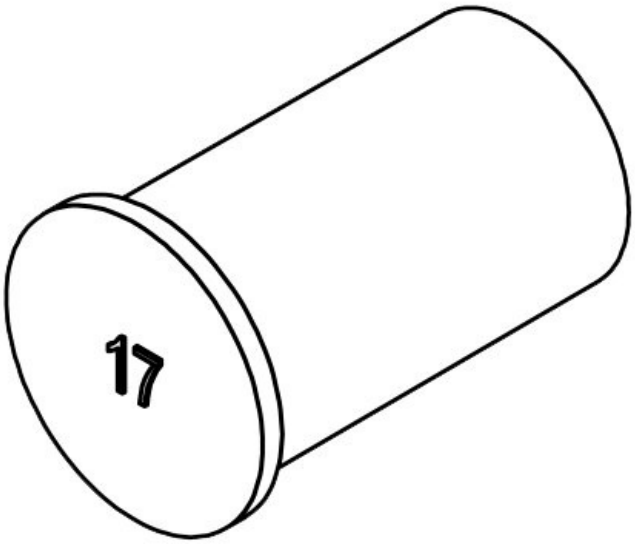


| | |
|---|---|
| Part No. | **42817** |
| EAN | **4251269332173** |
| Package quantity | **25** |
| Length | **30 mm** |
| Diameter D1 | **20 mm** |
| Diameter D2 | **17 mm** |

**ST-B 18**

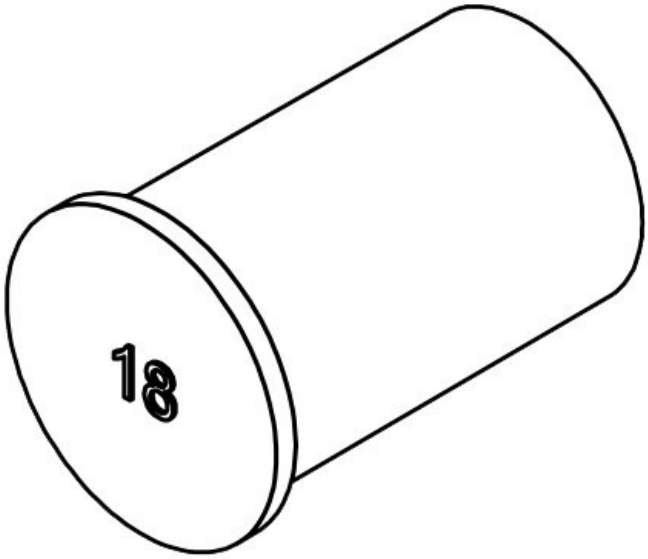


| | |
|---|---|
| Part No. | **42818** |
| EAN | **4251269332180** |
| Package quantity | **25** |
| Length | **30 mm** |
| Diameter D1 | **21 mm** |
| Diameter D2 | **18 mm** |

**ST-B 19**

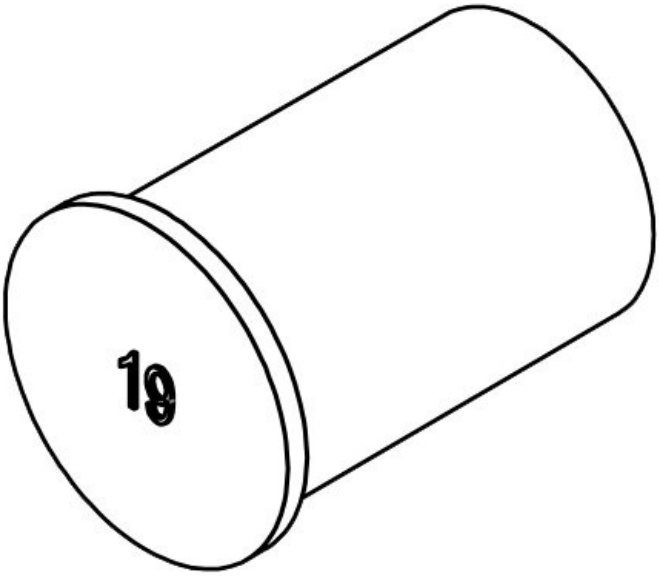


| | |
|---|---|
| Part No. | **42819** |
| EAN | **4251269332197** |
| Package quantity | **25** |
| Length | **30 mm** |
| Diameter D1 | **22 mm** |
| Diameter D2 | **19 mm** |

**ST-B 20**

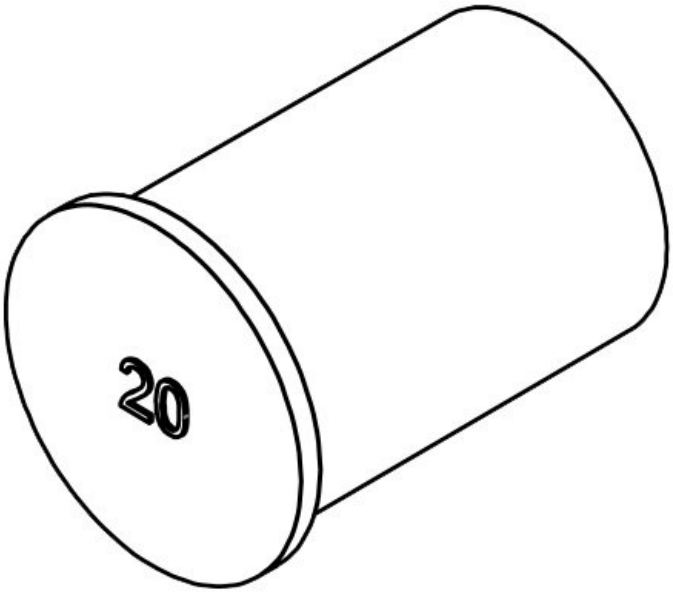


| | |
|---|---|
| Part No. | **42820** |
| EAN | **4251269332203** |
| Package quantity | **10** |
| Length | **30 mm** |
| Diameter D1 | **23 mm** |
| Diameter D2 | **20 mm** |

**ST-B 21**

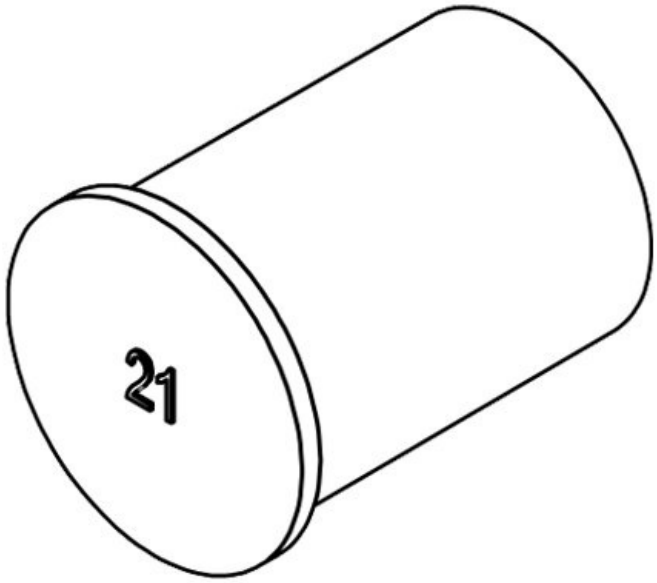


| | |
|---|---|
| Part No. | **42821** |
| EAN | **4251269332 210** |
| Package quantity | **10** |
| Length | **30 mm** |
| Diameter D1 | **24 mm** |
| Diameter D2 | **21 mm** |

**ST-B 22**

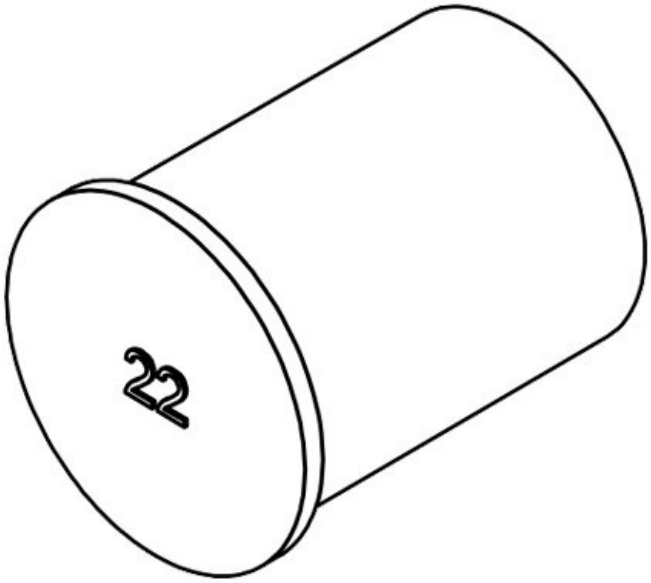


| | |
|---|---|
| Part No. | **42822** |
| EAN | **4251269309 182** |
| Package quantity | **10** |
| Length | **30 mm** |
| Diameter D1 | **25 mm** |
| Diameter D2 | **22 mm** |

**ST-B 23**

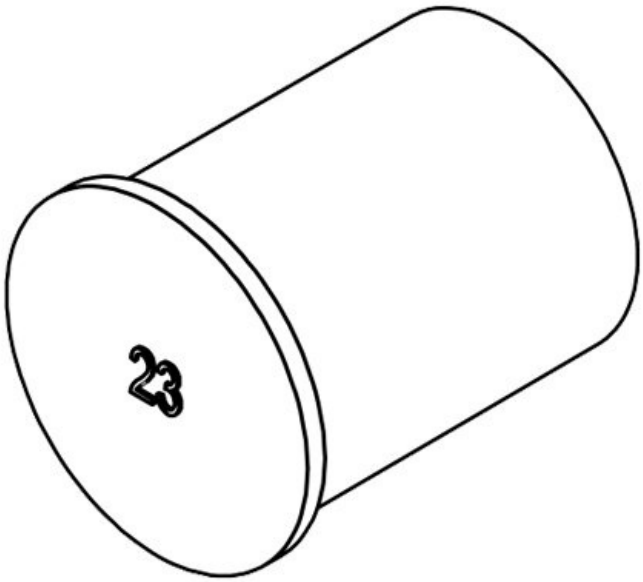


| | |
|---|---|
| Part No. | **42823** |
| EAN | **4251269332 227** |
| Package quantity | **10** |
| Length | **30 mm** |
| Diameter D1 | **26 mm** |
| Diameter D2 | **23 mm** |

**ST-B 24**

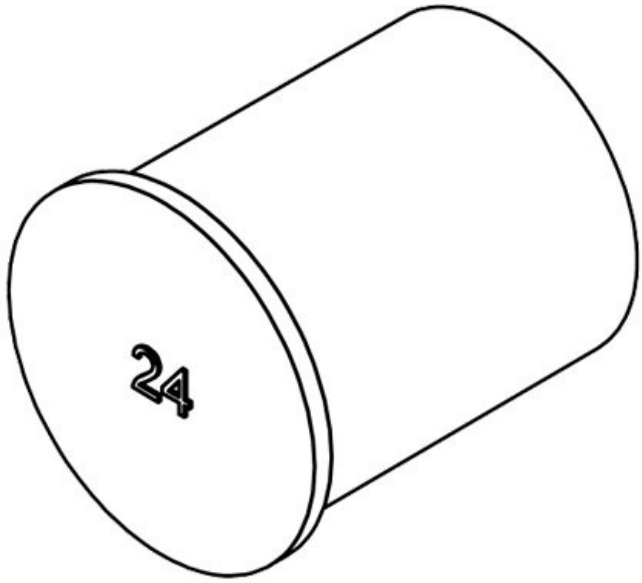


| | |
|---|---|
| Part No. | **42824** |
| EAN | **4251269332234** |
| Package quantity | **10** |
| Length | **30 mm** |
| Diameter D1 | **27 mm** |
| Diameter D2 | **24 mm** |

**ST-B 25**

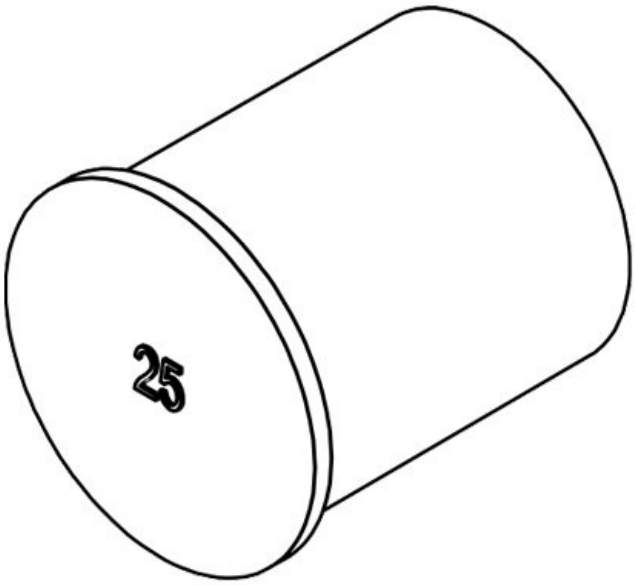


| | |
|---|---|
| Part No. | **42825** |
| EAN | **4251269332241** |
| Package quantity | **10** |
| Length | **30 mm** |
| Diameter D1 | **28 mm** |
| Diameter D2 | **25 mm** |

**ST-B 26**

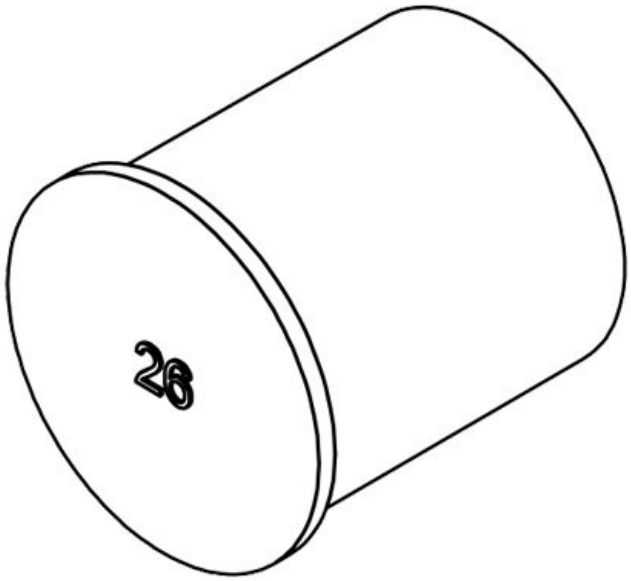


| | |
|---|---|
| Part No. | **42826** |
| EAN | **4251269332258** |
| Package quantity | **10** |
| Length | **30 mm** |
| Diameter D1 | **29 mm** |
| Diameter D2 | **26 mm** |

**ST-B 27**

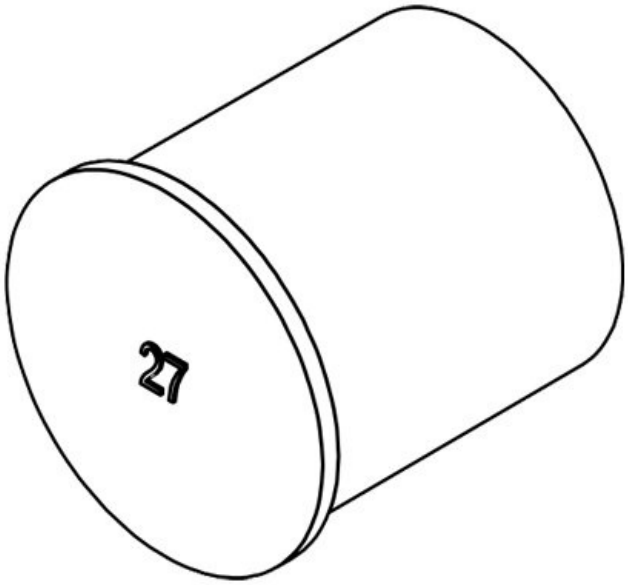


| | |
|---|---|
| Part No. | **42827** |
| EAN | **4251269332340** |
| Package quantity | **10** |
| Length | **30 mm** |
| Diameter D1 | **30 mm** |
| Diameter D2 | **27 mm** |

**ST-B 28**

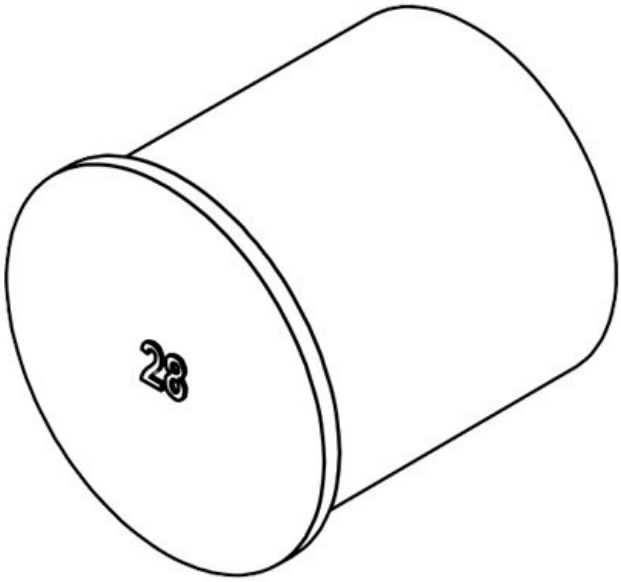


| | |
|---|---|
| Part No. | **42828** |
| EAN | **4251269332357** |
| Package quantity | **10** |
| Length | **30 mm** |
| Diameter D1 | **31 mm** |
| Diameter D2 | **28 mm** |

**ST-B 29**

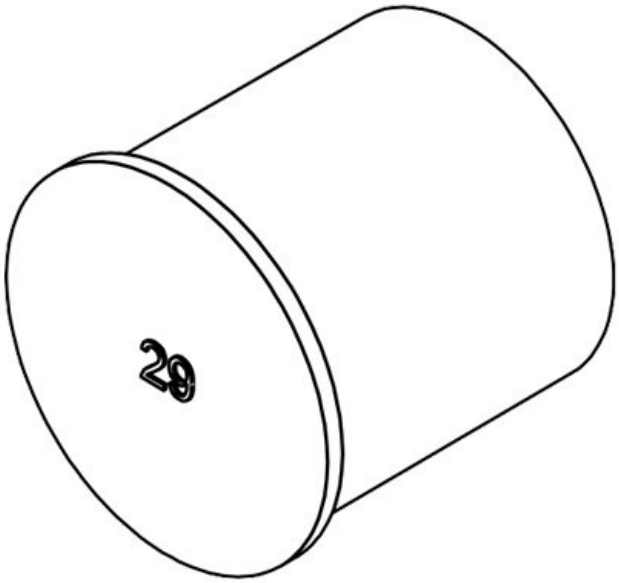


| | |
|---|---|
| Part No. | **42829** |
| EAN | **4251269332364** |
| Package quantity | **10** |
| Length | **30 mm** |
| Diameter D1 | **32 mm** |
| Diameter D2 | **29 mm** |

**ST-B 30**

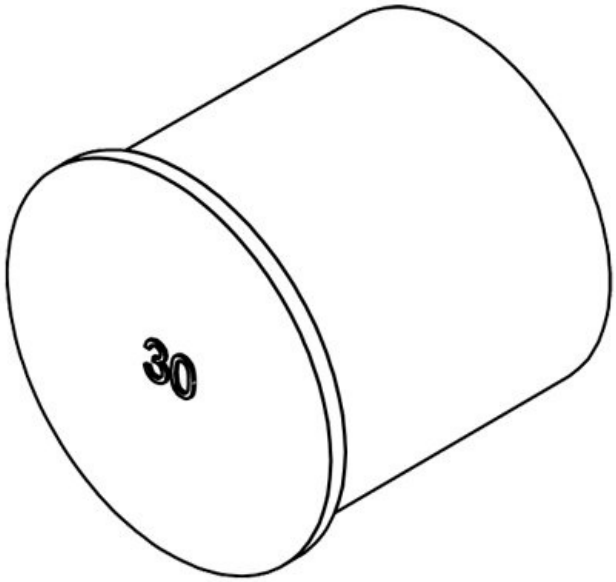


| | |
|---|---|
| Part No. | **42830** |
| EAN | **4251269332371** |
| Package quantity | **10** |
| Length | **30 mm** |
| Diameter D1 | **33 mm** |
| Diameter D2 | **30 mm** |

**ST-B 31**

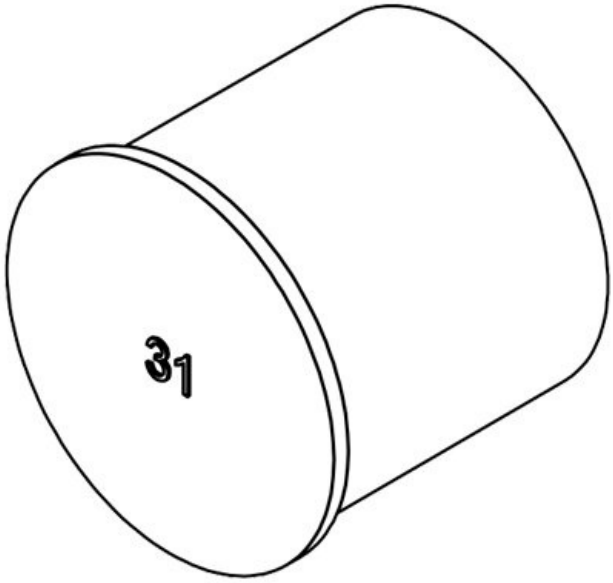


| | |
|---|---|
| Part No. | **42831** |
| EAN | **4251269332388** |
| Package quantity | **10** |
| Length | **30 mm** |
| Diameter D1 | **34 mm** |
| Diameter D2 | **31 mm** |

**ST-B 32**

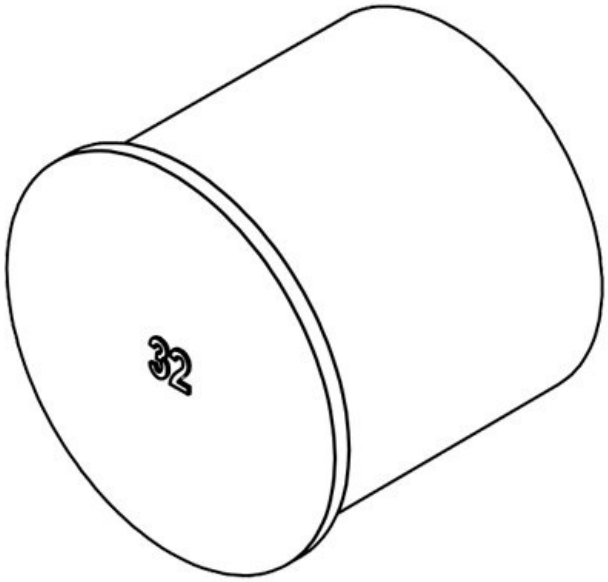


| | |
|---|---|
| Part No. | **42832** |
| EAN | **4251269332395** |
| Package quantity | **10** |
| Length | **30 mm** |
| Diameter D1 | **35 mm** |
| Diameter D2 | **32 mm** |

**ST-B 33**

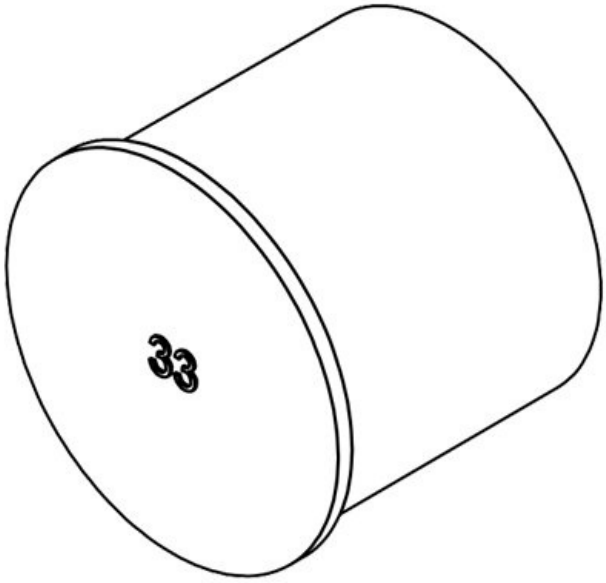


| | |
|---|---|
| Part No. | **42833** |
| EAN | **4251269332401** |
| Package quantity | **10** |
| Length | **30 mm** |
| Diameter D1 | **36 mm** |
| Diameter D2 | **33 mm** |

**ST-B 34**

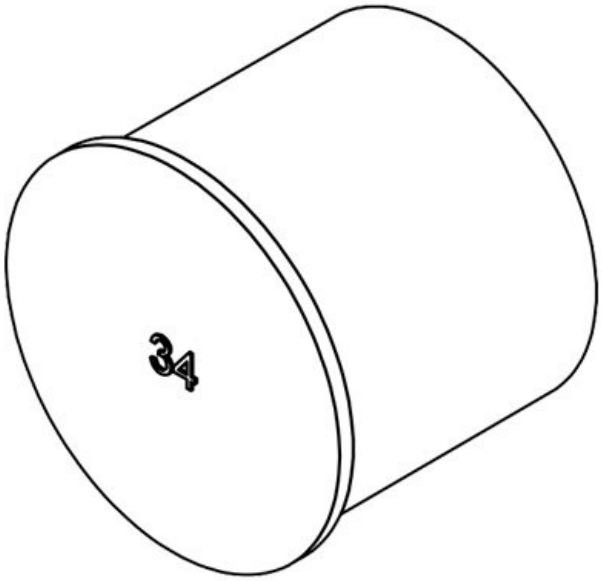


| | |
|---|---|
| Part No. | **42834** |
| EAN | **4251269332418** |
| Package quantity | **10** |
| Length | **30 mm** |
| Diameter D1 | **37 mm** |
| Diameter D2 | **34 mm** |

icotek®
smart cable management